701 TS

L = 77–88 2.68”–3.46”

701 S

L = 77–88 3.03”–3.46”

701 HS
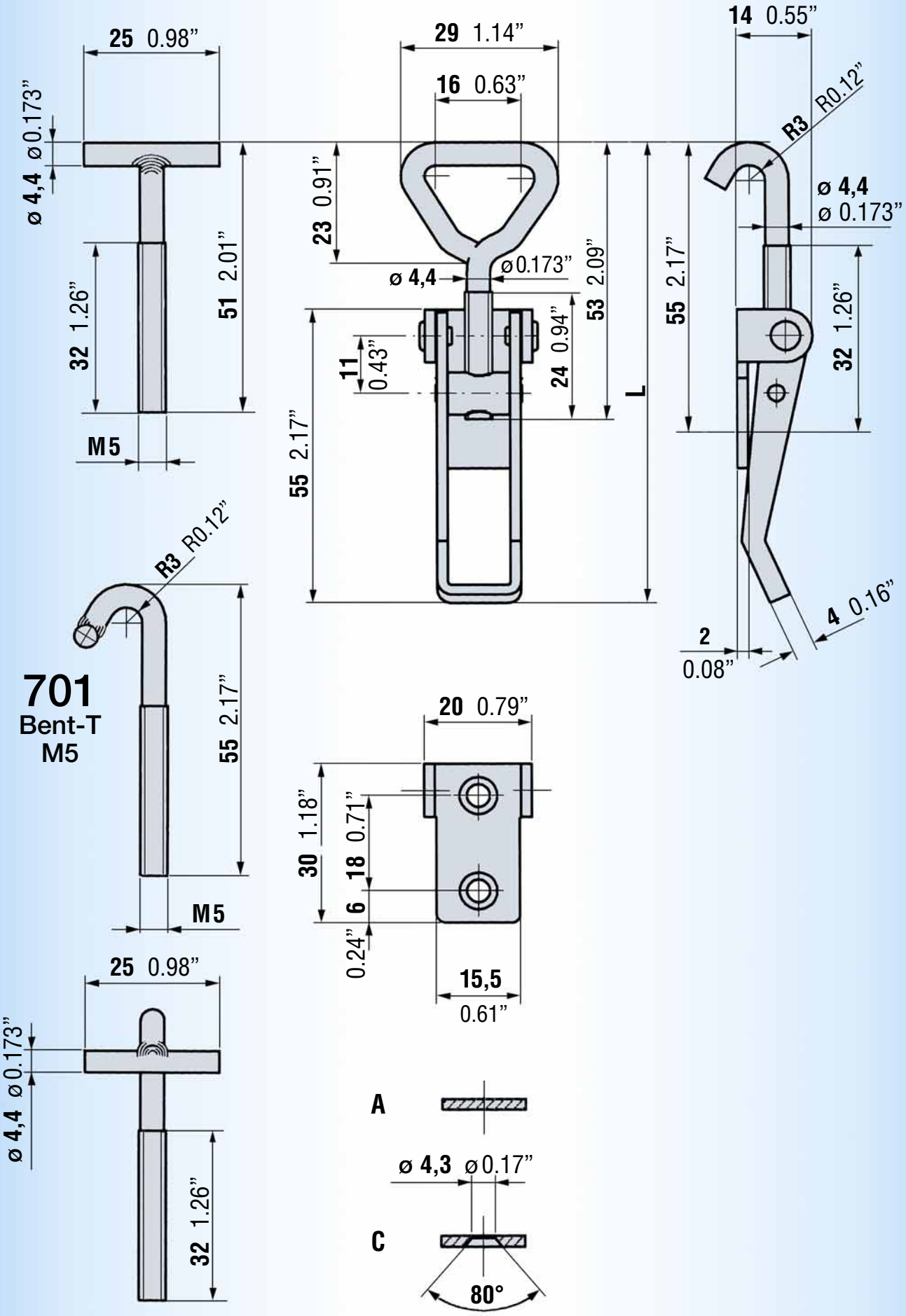
L = 75–90 2.95”–3.54”